This is a free 11 page sample. Access the full version online.

NSAI Standards

Irish Standard
I.S. EN ISO 5829:2021

Resistance spot welding - Electrode adaptors, female taper 1:10 (ISO 5829:1984)

© CEN 2021 No copying without NSAI permission except as permitted by copyright law.

This is a free 11 page sample. Access the full version online.

I.S. EN ISO 5829:2021

Incorporating amendments/corrigenda/National Annexes issued since publication:

The National Standards Authority of Ireland (NSAI) produces the following categories of formal documents:

I.S. xxx: Irish Standard — national specification based on the consensus of an expert panel and subject to public consultation.

S.R. xxx: Standard Recommendation — recommendation based on the consensus of an expert panel and subject to public consultation.

SWiFT xxx: A rapidly developed recommendatory document based on the consensus of the participants of an NSAI workshop.

This document replaces/revises/consolidates the NSAI adoption of the document(s) indicated on the CEN/CENELEC cover/Foreword and the following National document(s):

NOTE: The date of any NSAI previous adoption may not match the date of its original CEN/CENELEC document.

This document is based on:	*Published:*
EN ISO 5829:2021	2021-01-13

This document was published under the authority of the NSAI and comes into effect on:	ICS number:
2021-01-31	25.160.30
	NOTE: If blank see CEN/CENELEC cover page

NSAI	T +353 1 807 3800	Sales:
1 Swift Square,	F +353 1 807 3838	T +353 1 857 6730
Northwood, Santry	E standards@nsai.ie	F +353 1 857 6729
Dublin 9	W NSAI.ie	W standards.ie

Údarás um Chaighdeáin Náisiúnta na hÉireann

National Foreword

I.S. EN ISO 5829:2021 is the adopted Irish version of the European Document EN ISO 5829:2021, Resistance spot welding - Electrode adaptors, female taper 1:10 (ISO 5829:1984)

This document does not purport to include all the necessary provisions of a contract. Users are responsible for its correct application.

For relationships with other publications refer to the NSAI web store.

Compliance with this document does not of itself confer immunity from legal obligations.

In line with international standards practice the decimal point is shown as a comma (,) throughout this document.

This is a free 11 page sample. Access the full version online.

This is a free 11 page sample. Access the full version online.

This page is intentionally left blank

EUROPEAN STANDARD

NORME EUROPÉENNE

EUROPÄISCHE NORM

EN ISO 5829

January 2021

ICS 25.160.30

English Version

Resistance spot welding - Electrode adaptors, female taper 1:10 (ISO 5829:1984)

Soudage par points par résistance - Allonges d'électrode à embout amovible (cône femelle 1/10) (ISO 5829:1984)

Widerstandspunktschweißen - Elektrodenadapter, Innenkegel 1 : 10 (weiblich) (ISO 5829:1984)

This European Standard was approved by CEN on 6 December 2020.

CEN members are bound to comply with the CEN/CENELEC Internal Regulations which stipulate the conditions for giving this European Standard the status of a national standard without any alteration. Up-to-date lists and bibliographical references concerning such national standards may be obtained on application to the CEN-CENELEC Management Centre or to any CEN member.

This European Standard exists in three official versions (English, French, German). A version in any other language made by translation under the responsibility of a CEN member into its own language and notified to the CEN-CENELEC Management Centre has the same status as the official versions.

CEN members are the national standards bodies of Austria, Belgium, Bulgaria, Croatia, Cyprus, Czech Republic, Denmark, Estonia, Finland, France, Germany, Greece, Hungary, Iceland, Ireland, Italy, Latvia, Lithuania, Luxembourg, Malta, Netherlands, Norway, Poland, Portugal, Republic of North Macedonia, Romania, Serbia, Slovakia, Slovenia, Spain, Sweden, Switzerland, Turkey and United Kingdom.

This is a free 11 page sample. Access the full version online.

EUROPEAN COMMITTEE FOR STANDARDIZATION
COMITÉ EUROPÉEN DE NORMALISATION
EUROPÄISCHES KOMITEE FÜR NORMUNG

CEN-CENELEC Management Centre: Rue de la Science 23, B-1040 Brussels

© 2021 CEN All rights of exploitation in any form and by any means reserved worldwide for CEN national Members.

Ref. No. EN ISO 5829:2021 E

Contents

Page

European foreword **3**

This is a free 11 page sample. Access the full version online.

This is a free 11 page sample. Access the full version online.

European foreword

The text of ISO 5829:1984 has been prepared by Technical Committee ISO/TC 44 "Welding and allied processes" of the International Organization for Standardization (ISO) and has been taken over as EN ISO 5829:2021 by Technical Committee CEN/TC 121 "Welding and allied processes" the secretariat of which is held by DIN.

This European Standard shall be given the status of a national standard, either by publication of an identical text or by endorsement, at the latest by July 2021, and conflicting national standards shall be withdrawn at the latest by July 2021.

Attention is drawn to the possibility that some of the elements of this document may be the subject of patent rights. CEN shall not be held responsible for identifying any or all such patent rights.

According to the CEN-CENELEC Internal Regulations, the national standards organizations of the following countries are bound to implement this European Standard: Austria, Belgium, Bulgaria, Croatia, Cyprus, Czech Republic, Denmark, Estonia, Finland, France, Germany, Greece, Hungary, Iceland, Ireland, Italy, Latvia, Lithuania, Luxembourg, Malta, Netherlands, Norway, Poland, Portugal, Republic of North Macedonia, Romania, Serbia, Slovakia, Slovenia, Spain, Sweden, Switzerland, Turkey and the United Kingdom.

Endorsement notice

The text of ISO 5829:1984 has been approved by CEN as EN ISO 5829:2021 without any modification.

This is a free 11 page sample. Access the full version online.

This page is intentionally left blank

International Standard ISO 5829

INTERNATIONAL ORGANIZATION FOR STANDARDIZATION•МЕЖДУНАРОДНАЯ ОРГАНИЗАЦИЯ ПО СТАНДАРТИЗАЦИИ•ORGANISATION INTERNATIONALE DE NORMALISATION

This is a free 11 page sample. Access the full version online.

Resistance spot welding — Electrode adaptors, female taper 1 : 10

Soudage par points par résistance — Allonges d'électrode à embout amovible (cône femelle 1/10)

First edition — 1984-10-01

UDC 621.791.039 : 621.791.763 **Ref. No. ISO 5829-1984 (E)**

Descriptors : welding, resistance welding, spot welding, resistance welding electrodes, electrode holders, dimensions, designation, marking.

Price based on 2 pages

This is a free 11 page sample. Access the full version online.

Foreword

ISO (the International Organization for Standardization) is a worldwide federation of national standards bodies (ISO member bodies). The work of preparing International Standards is normally carried out through ISO technical committees. Every member body interested in a subject for which a technical committee has been established has the right to be represented on that committee. International organizations, governmental and non-governmental, in liaison with ISO, also take part in the work.

Draft International Standards adopted by the technical committees are circulated to the member bodies for approval before their acceptance as International Standards by the ISO Council. They are approved in accordance with ISO procedures requiring at least 75 % approval by the member bodies voting.

International Standard ISO 5829 was prepared by Technical Committee ISO/TC 44, *Welding and allied processes.*

© **International Organization for Standardization, 1984** ●

Printed in Switzerland

This is a free 11 page sample. Access the full version online.

Resistance spot welding — Electrode adaptors, female taper 1 : 10

1 Scope and field of application

This International Standard specifies the dimensions and tolerances of resistance spot welding electrode adaptors where the fixing element for the cap is a female taper (male electrode cap, see ISO 5830) and for which the electrode taper fits conform to ISO 1089.

2 References

ISO 1089, *Electrode taper fits for spot welding equipment — Dimensions.*

ISO 1302, *Technical drawings — Method of indicating surface texture on drawings.*

ISO 5182, *Materials for resistance welding electrodes and ancillary equipment.*

ISO 5830, *Resistance spot welding male electrode caps.*

3 Dimensions

The dimensions shall be those given in the figure and the table.

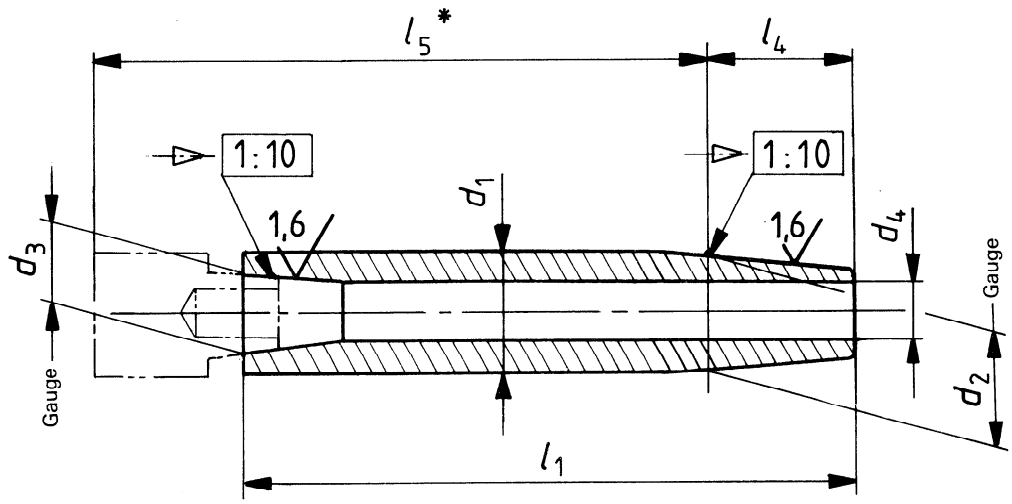

Figure — Electrode adaptor

Table — Dimensions

Dimensions in millimetres

d_1 h11	d_2[1]	d_3[1]	d_4	l_4 ± 0,5	l_1 for l_5* = 31,5	40	50	63	80
16	15,5	11,8	8	20	32,5	41	51	64	81

1) d_2 and d_3 are gauge dimensions at the taper reference line.

* For information purposes only.

SAI GLOBAL

This is a free preview. Purchase the entire publication at the link below:

I.S. EN ISO 5829 : 2021 : EN : COMBINED PDF

Looking for additional Standards? Visit SAI Global Infostore

Learn about LexConnect, All Jurisdictions, Standards referenced in Australian legislation

Need to speak with a Customer Service Representative - Contact Us

his is a free 11 page sample. Access the full version online.